International Journal of Advanced Research Trends in Engineering and Technology (IJARTET)
Vol. 1, Issue 3, November 2014

Detection of Power Theft Using GSM

S.Anusha[1], M.Madhavi[2], R.Hemalatha[3]

Assistant Professor, Electronics and Communication Engineering, Sri Ramakrishna Engineering College, Coimbatore, India[1, 2, 3]

Abstract*:* Science and technology with all its miraculous advancements has fascinated human life to a great extent that imagining a world without these innovations is hardly possible. While technology is on the raising slope, we should also note the increasing immoral activities. With a technical view, "Power Theft" is a non-ignorable crime that is highly prevalent, and at the same time it directly affects the economy of a nation. Detecting and eradicating such crimes with the assistance of the developing scientific field is the "Need of the Hour". With these views was this paper conceived and designed. Our paper provides a complete and comprehensive tool to prevent power theft which is very simple to understand and easy to implement. It includes three sections - transmitting, receiving, and processing sections. The main objective of this project is to indicate electric power theft to electricity board. It is carried over through embedded technology. Here wireless method is used to find out the electric theft.

Keywords: Current transformer, GSM, PIC16F877A Microcontroller, Energy Meter.

I. INTRODUCTION

Electricity Theft is a very common problem in countries like India, where population is very high and the users of electricity are ultimately tremendous. In India, every year there is a very increasing no of electricity thefts across domestic electricity connections as well as industrial electricity supply, which results in loss of electricity companies energy and because of which we are facing the frequent problems of load shading in urban as well as rural area so as to overcome the need of electricity for whole state. Also the ways using which theft can be done are also innumerable so we can never keep track of how a theft has occurred, and this issue is needed to be solved as early as possible.

In this abstract, we propose an electricity theft detection system to detect the theft which is made by the most common way of doing the theft and that is bypassing the meter using a piece of wire, people simply bypasses the electricity meter which is counting the current units by placing a wire before and after the meter reading unit. The proposed system will be hidden in such meters and as soon as an attempt is made for the theft, it will send an SMS to control unit of electricity board.

In this paper input and output current of a particular poleis compared by using current transformer. If there is any negative value means it is indicated that the particular pole has drawn more current as theft. Here one current transformer is placed in input side of the post line. Other current transformers are placed at the distribution points of the house lines. The output of current transformer values is given as input to PIC microcontroller. PIC microcontroller converts these analog inputs into digital using inbuilt ADC converter. Then PIC compares the input current and the sum of output currents. If compared result has any negative value then this particular post is detected as theft point. This compared value is transmitted to electricity board through RF transmitter. RF receiver is placed in electricity board office. This RF receiver receives this value and given as input to PIC. PIC displays this value in LCD display. The information will then be quickly processed by the microcontroller and a SMS will be sent through the GSM technology.

ERROR SIGNAL= MAXIMUM DEMAND-UTILIZATION LOAD

II. EXISTING METHODS

In the existing methods wireless communication system of energy meter used with Zigbee, relay control and GPRS. The cryptographic method is used to secure the communication channel and Zigbee for the transmission of data in a serial process.

III.PROPOSED METHODS

In the proposed method GSM technology used to transmit the meter reading to the government with the required cost. Fig 1 shows the block diagram of power theft

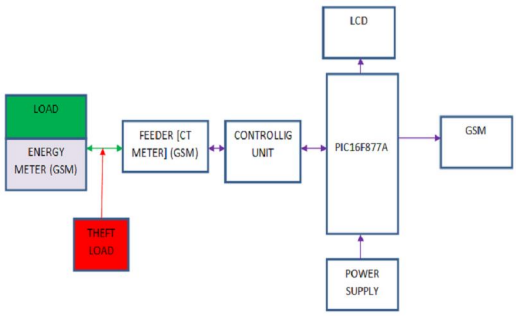

Fig. 1.Block Diagram of Power Theft

A. Energy Meter

Energy meter is a device that calculates the cost of electricity consumed by a home, business, or electrically powered device. In this project our meter box made of current transformer, IR sensor and magnetic reed switch. According to the energy meter calculates the reading with the help of the current transformer. IR sensor and magnetic reed switch are used to detect the theft in energy meter. Fig 2 shows the maximum demand of load

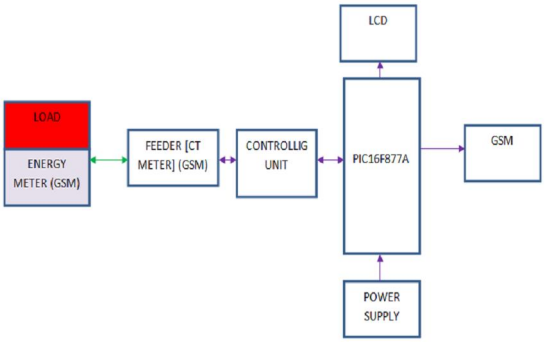

Fig. 2. Maximum Demand

IV. POWER SUPPLY

The input to the circuit is applied from the regulated power supply. The AC input i.e., 230V from the mains supply is step down by the transformer to 12V and is fed to a rectifier. The output obtained from the rectifier is a pulsating DC voltage. So in order to get a pure DC voltage, the output voltage from the rectifier is fed to a filter to remove any AC components present even after rectification. Now, this voltage is given to a voltage regulator to obtain a pure constant dc voltage.

V. CURRENT TRANSFORMER

Current Transformers (CT's) can be used for monitoring current or for transforming primary current into reduced secondary. Current used for meters, relays, control equipment and other instruments. CT's transform current isolate the high voltage primary, permit grounding of the secondary, and step-down the magnitude of the measured current to a standard value that can be safely handled by the instrument.

VI. GSM TECHNOLOGY

- GSM was designed with a moderate level of service security. The system was designed to authenticate the subscriber using a pre-shared key and challenge-response. The development of UMTS introduces an optional Universal Subscriber Identity Module (USIM), that uses a longer authentication key to give greater security, as well as mutually authenticating the network and the user - whereas GSM only authenticates the user to the network (and not vice versa). Communications between the subscriber and the base station can be encrypted. The security model therefore offers confidentiality and authentication, but limited authorization capabilities, and no non-repudiation.

VII. PIC PROCESS OF THE SYSTEM

The PIC is the main part of theft control. It is based on low power 16bit PIC16F877A processor. PIC consists of high performance and low cost of network technology. The memory organization of PIC consists of three memory blocks. The program memory organization consists of 13bit program count memory space. Data memory split into number of banks and it consist of GPR and SFR. The general purpose register file can be accessed in a straight line or in some way through the file select register. SFR is used in the processor and peripheral for controlling the system.

VIII. FLOWCHART

To program a micro-controller to detect a power theft on one line following flowchart as shown in Fig 3 is used. First of all initialize ports of micro-controller as input or output as per required. Set the tolerance in program depending on the loss of line for which this system is installed. Set the delay time (say 10min) which is depending on after how much time interval system scan the line for theft detection. Take the data from wireless data receiver at

preset time interval (10min). It represents power consumed by load over given time. Take the data from meter installed on pole at the same time. It will represent the power sent over that line for preset value (10min). If power sent on line is more than power consumed by that load over a given time considering tolerance the power theft is occurring on that line. Send the signal of power theft with the line number and its area to utility company. For this wireless transmission or power line communication can be used. If power theft is not occurring on that line then again take the data after say 10min. It's an endless program.

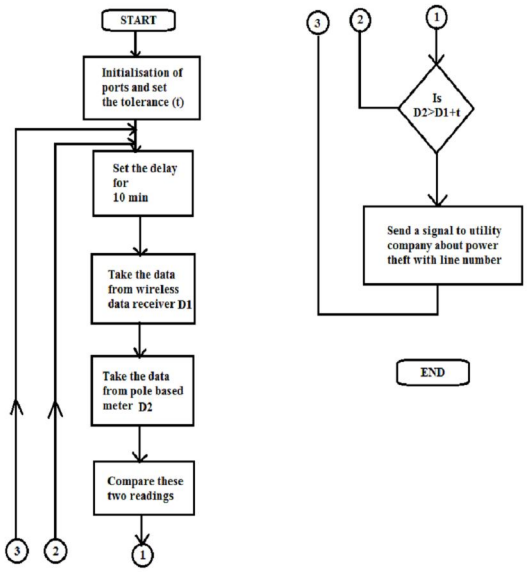

Fig. 3.Power theft detection- Flowchart

IV. CONCLUSION & FUTURE SCOPE

The project model reduces the manual manipulation work and theft .Use of GSM in our system provides the numerous advantages of wireless network systems. The government saves money by the control of theft in energy meter and also more beneficial for customer side and the government side. The metering IC ensures the accurate and reliable measurement of power consumed. Cost wise low when compared to other energy meter without automatic meter reading and theft control. The project better suits for displaying information in long distances, and the information can be send, alter any time according to user requirement.

REFERENCES

[1]. Amin S. Mehmood, T. Choudhry, M.A. Hanif, "A Reviewing the Technical Issues for the Effective Construction of Automatic Meter Reading System" in International Conference on Microelectronics, 2005 IEEE.

[2]. Abdollahi, A. Dehghani, M. Zamanzadeh,"SMS-based Reconfigurable Automatic Meter Reading System" in Control Applications, 2007.

[3]. Bharath, P.; Ananth, N.; Vijetha, S.; Prakash, K.V.J.; "Wireless Automated Digital Energy Meter" in Sustainable Energy Technologies, ICSET 2008.

[4]. Vinu V Das, "Wireless Communication System for Energy Meter Reading" in International Conference on Advances in Recent Technologies in Communication and Computing, 2009.

[5]. S. Arun; Dr, Sidappa Naidu, "Design and Implementation of Automatic Meter Reading System Using GSM, ZIGBEE through GPRS" in international journal of advanced research in computer science software engineering , 2012.

[6]. Abhinandan Jain, Dilip Kumar, Jyoti Kedia, ''Design and Development of GSM based Energy Meter'' in IJERT, 2012.

[7]. P. Rakesh Malhotra et al. / International Journal of Engineering and Technology (IJET) ISSN

[8]. Mason, C. R. "Art & Science of Protective Relaying, Chapter 2, GE Consumer & Electrical". Retrieved October 9, 2011.

[9]. Jump up to:[a b] A. C. Keller. "Recent Developments in Bell System Relays -- Particularly Sealed Contact and Miniature Relays". The Bell System Technical Journal. 1964.

AUTHOR'S BIOGRAPHY

1. Ms. S.Anusha received M.E degree in Control and Instrumentation from Anna University in 2012. She is currently working as an Assistant Professor in Sri Ramakrishna Engineering College, Coimbatore, India. Her interests are in VLSI, Instrumentation.

2. Ms. M.Madhavi received M.E degree in Industrial Engineering from Kumaraguru College of Technology in 2012. She is currently working as an Assistant Professor in Sri Ramakrishna Engineering College, Coimbatore, India. Her interests are in Optimization, Embedded.

3. Ms. R.Hemalatha received M.E degree in Applied Electronics from Anna University in 2013. She is currently working as an Assistant Professor in Sri Ramakrishna Engineering College, Coimbatore, India. Her interests are in Embedded, Wireless networks.